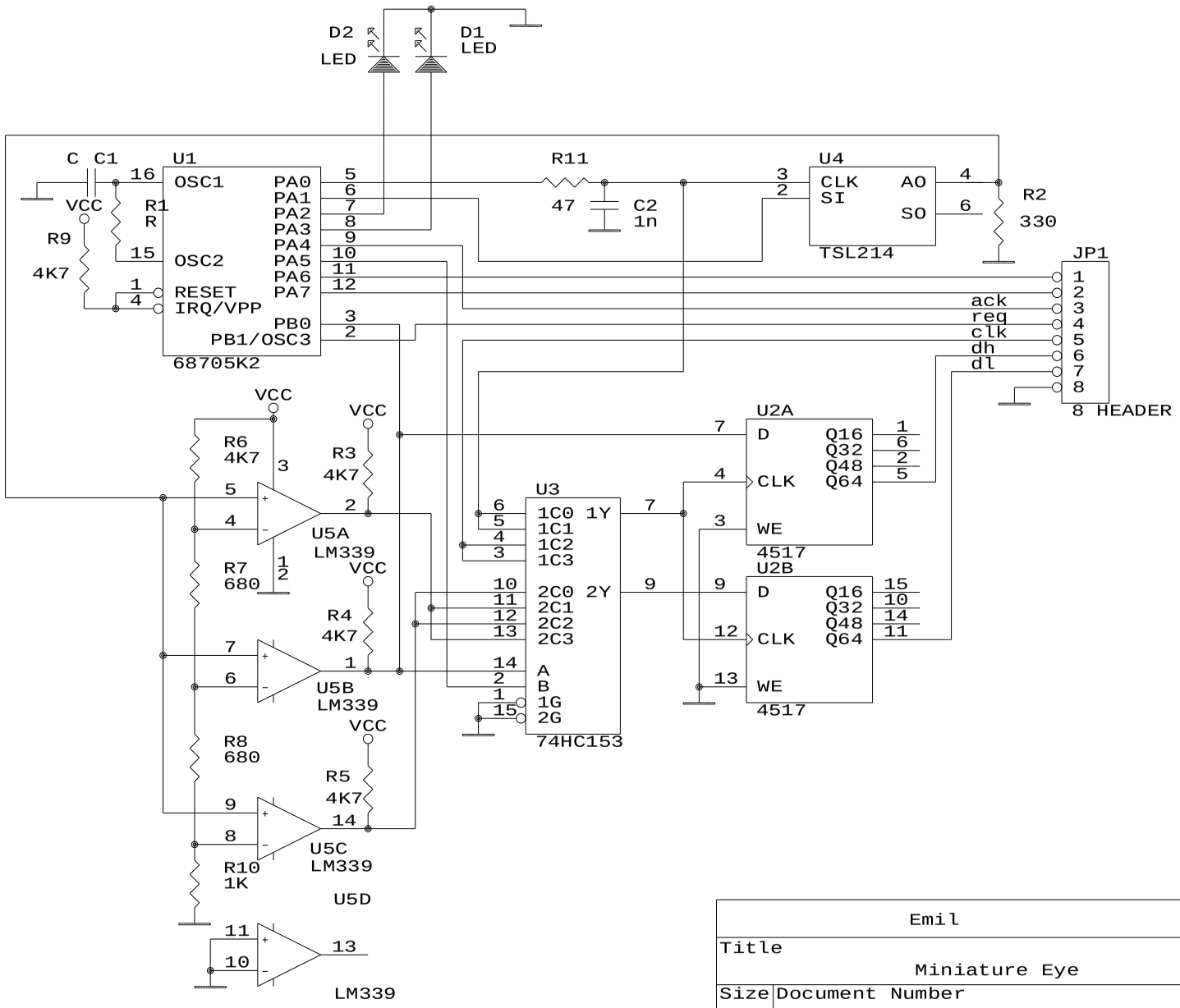

Emil		
Title: Miniature Eye		
Size: A	Document Number	REV
Date: September 8, 1992	Sheet 1 of 1	