MOTOROLA
SEMICONDUCTOR
APPLICATION NOTE

Order this document
by AN1003/D

AN1003

A Featurephone Design, with Tone Ringer and Dialer, Using the MC34118 Speakerphone IC

Prepared by
Dennis Morgan
Bipolar Analog IC Division

INTRODUCTION

This application note describes how to add a handset, dialer and tone ringer to the MC34118 speakerphone circuit. Although any one of several speech networks could be used as an interface between the MC34118 and the phone line (those possibilities are discussed in separate application notes) this application note covers the case where simplicity and low cost are paramount. A "Privacy" (Mike Mute) function is included, but not pulse dialing, nor line length compensation.

Two circuits are developed in this discussion: a line-powered featurephone and one powered from a power supply. The circuits are nearly identical, except for the Tip and Ring interface. Their parameters however, differ noticeably, particularly in the low loop current range.

MC34118 DESCRIPTION

The MC34118 speakerphone IC provides all of the necessary functions for a complete speakerphone circuit, except for the speaker amplifier, in a single integrated circuit. Included are the transmit and receive attenuators, which operate in a complementary manner, to provide the half-duplex function. The four level detectors, in conjunction with the background noise monitors and the control algorithm, provide a four point sensing and decision making system to control the attenuators based on the levels and timing of the transmit and receive signals. A filter, user selectable to be high pass, low pass, or bandpass, is included for filtering either the transmit or receive signals. Additional functions include volume control for the receive path, a Mute input for the microphone amplifier and a chip disable pin. A simplified block diagram is shown in Figure 1.

Unlike many other speakerphone ICs, the MC34118 includes the hybrid amplifiers for the two-to-four wire conversion when used in conjunction with a transformer. Figure 2 depicts a basic line powered speakerphone using the MC34119 speaker amplifier. When used in parallel with any standard telephone, all of the necessary telephone functions are then provided.

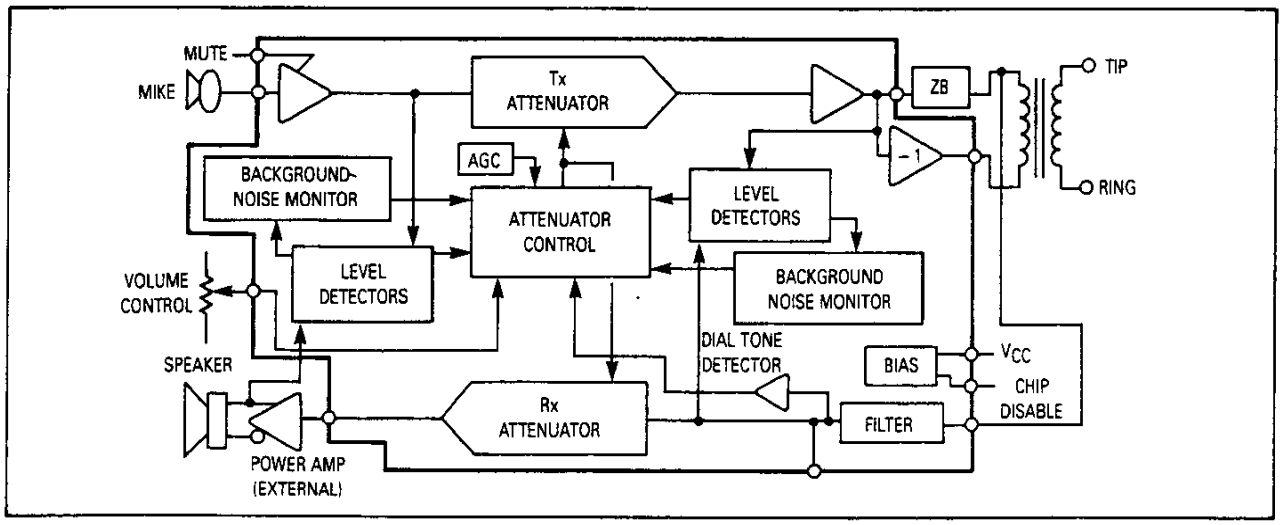

Figure 1. Simplified Block Diagram

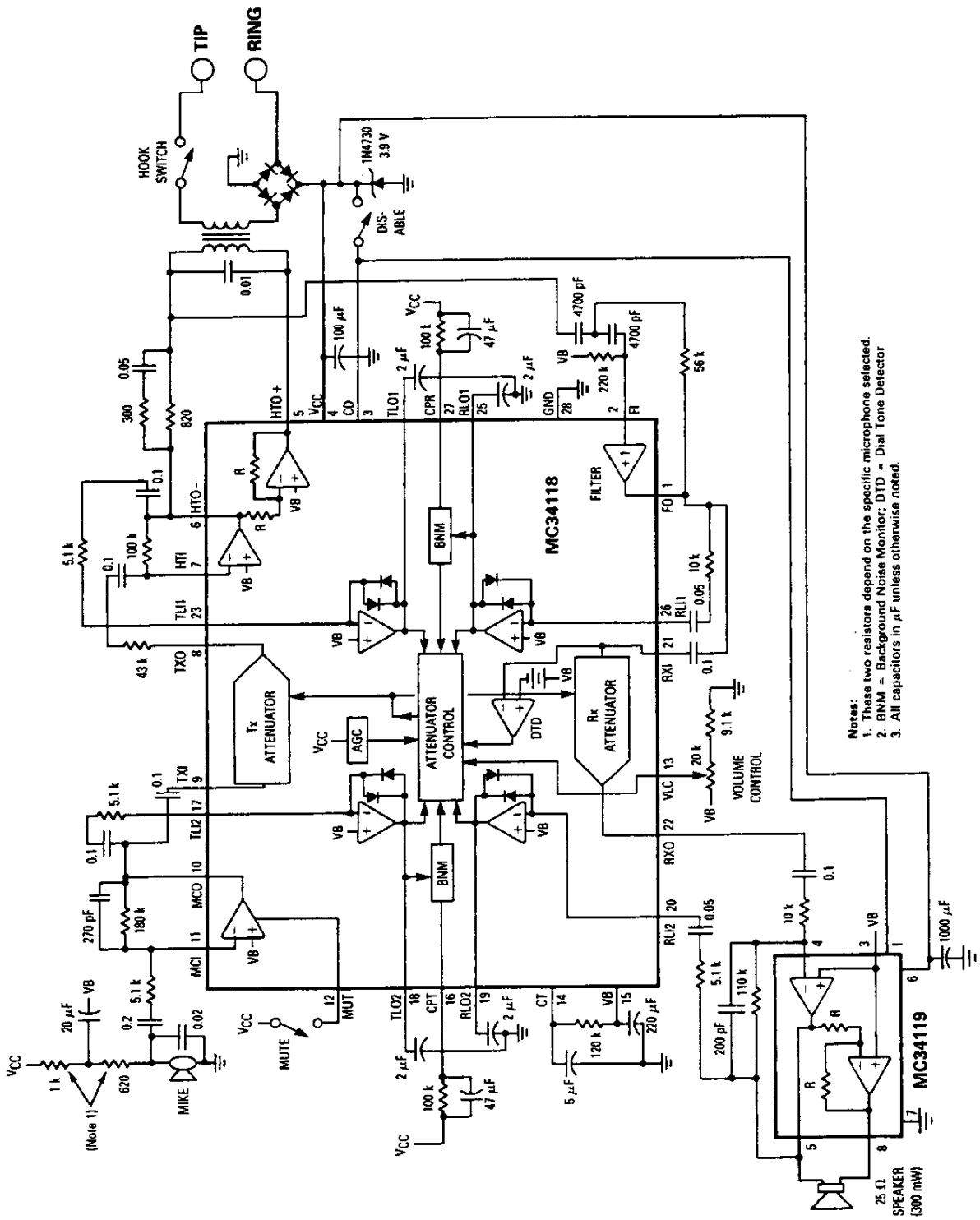

Figure 2. Basic Line-Powered Speakerphone

LINE-POWERED FEATUREPHONE

DC Characteristics

The DC characteristics of the circuit (Figure 2) are determined by the resistance of the transformer winding (Stancor TTPC-13 in this circuit development), the diode bridge and the zener diode. Using a 3.9 volt zener diode (to power the speakerphone and the various parts of the circuit) the voltage at Tip and Ring is within the EIA-470 guidelines.

With a V_{CC} of 3.9 volts, the MC34118 provides a VB voltage (Pin 15) of ≈1.6 volts. The VB voltage is used as an AC ground for the entire circuit.

Adding the Handset Microphone

The microphone used in developing this circuit was the Primo EM-95 which operates with a bias current of 500 μA to 1 mA. The bias current is obtained from the V_{CC} supply voltage, but the bias resistor is composed of two resistors, with the center tap AC coupled to VB, as shown in Figure 3. The AC output level of the microphone is determined by the 3.9 kΩ resistor, while the DC bias level is determined by the sum of the 3.9 k and 3 k resistors, and V_{CC}. The 0.047 μF capacitor provides high frequency roll-off. The AC output of the above circuit goes to Pin 7 (HTI) of the MC34118, which is the summing junction of the first hybrid amplifier. The 1 k resistor, in conjunction with the 100 k feedback resistor on the amplifier (Figure 3), sets the gain. In this way, the microphone signals are fed to Tip and Ring. The gain of this circuit can be adjusted by varying the 1 k or the 3.9 k resistor, or both. Different microphone models generally have different biasing requirements for optimum output levels.

The transistor, activated by an active high Mute signal, will shut off the microphone when it is to be inoperative, such as during dialing and during speakerphone operation.

Adding the Handset Receiver

Although the receive signals are available at the filter's output (FO, Pin 1), the low impedance of a typical receiver (100–150 Ω) requires a separate amplifier, depicted in Figure 4, to drive it. The MC33171 was chosen due to its low supply current (typically 180 μA). It is biased from VB and set for a gain of ≈0.43 (−7.3 dB). Low frequency roll-off is provided by the 0.047 μF input capacitor, as well as by the filter. High frequency roll-off is not provided since the presence of high frequencies generally make the sound "crisper" and therefore easier to understand. If roll-off is desired, simply add a capacitor across the 4.3 k feedback resistor.

The addition of the op amp facilitates providing sidetone control, which is obtained by sampling the transmit signal at HTO− (Pin 6) and using that to cancel part of the sidetone signal. The 20 k resistor and 0.02 μF capacitor provide a phase shift to compensate for the signal's phase shift at FO relative to HTO−, caused by the transformer and the line's complex impedance. The combination of the phase shift and the 10 k resistor (RS) determine the amount of sidetone cancellation.

Since the op amp is driving an inductive receiver at the end of a 2 to 3 foot cord, the 0.01 μF capacitors at the inputs are necessary for stability.

The diode provides a simple means for disabling this circuit during speakerphone operation. With "Shutoff" at ground, the amplifier is disabled.

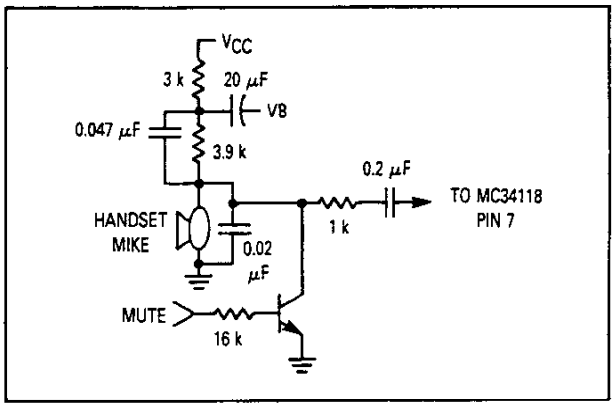

Figure 3. Handset Microphone Circuit

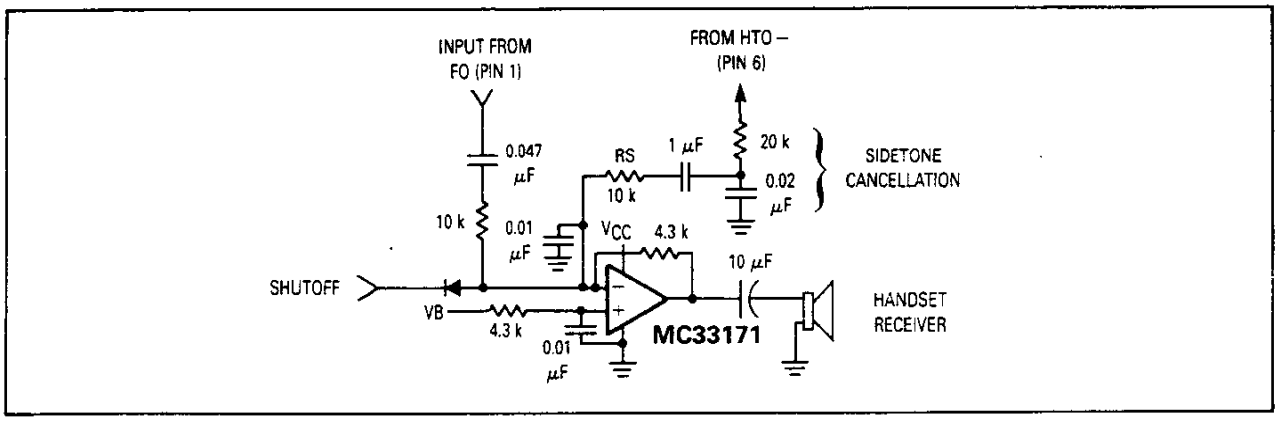

Figure 4. Handset Receiver Circuit

Adding the Dialer

The dialer is the MC145412 pulse/tone dialer with 10 number memory. Since the pulse dialing function is not used, the MS pin is grounded and the OPL (Outpulsing) and TSO (Pacifier tone) outputs are not used. The circuit uses a standard 3.58 MHz crystal and standard 3 x 4 or 4 x 4 keypads.

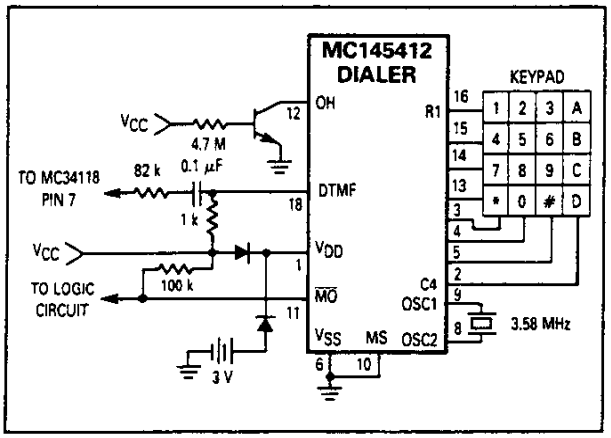

Figure 5. Dialer Circuit

Referring to Figure 5, the NPN transistor at Pin 12 indicates the on-hook/off-hook status to the IC. Power for the dialer is V_{CC}, diode connected with a memory sustaining battery. The DTMF output goes to Pin 7 (HTI) of the MC34118, which is the summing junction of the first hybrid amplifier. The 82 k resistor, in conjunction with the 100 k feedback resistor on the amplifier, determines the gain. With the values shown, the DTMF output at Tip and Ring is approximately 550 mVrms (−3 dBm). To change the output level, vary the 82 k resistor appropriately.

The Mute Output ($\overline{MO}$) is active low, open drain and pulls to ground while dialing. It is used to mute the speech paths during dialing.

Switching the Circuit Around

The logic functions involve: a) switching the circuit from handset mode to/from speakerphone mode, b) switching in and out of the dialing mode while in either handset or speakerphone mode and c) muting the two microphones for the "Privacy" function. Table 1 tabulates the requirements:

Table 1.

	Handset		Speakerphone	
Function	**Mike**	**R'cvr**	**Mike**	**Speaker**
Handset Speech	On	On	Off	Off
Handset Dialing	Off	Mute	Off	Off
Handset Mike Mute	Off	On	Off	Off
Speakerphone Speech	Off	Off	On	On
Speakerphone Dialing	Off	Off	Off	Mute
Speakerphone Mike Mute	Off	Off	Off	On

In Table 1, "ON" means fully functional, "OFF" means non-functional and "MUTE" means partially muted (10 to 20 dB).

To provide the logic functions and with the intent of keeping the number of mechanical switches to a minimum and simplicity at an optimum, an MC14023 triple 3-input CMOS NAND gate was used. See Figure 6.

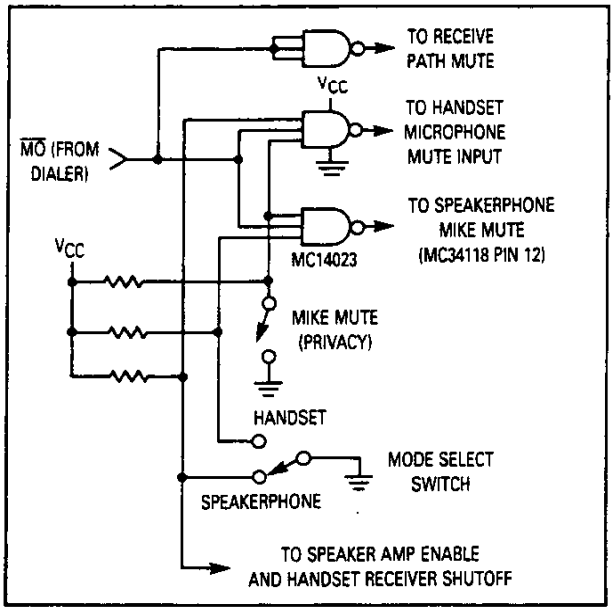

Figure 6. Logic Circuit

The inputs are the Mute Output ($\overline{MO}$) from the dialer (described above), the Mike Mute switch and the Mode Select switch. The outputs are:

1. An active low output which enables the MC34119 speaker amplifier (at its Pin 1) and disables the handset receiver;
2. An active high output which disables the speakerphone microphone at the MC34118's Pin 12 (MUT);
3. An active high output which disables the handset microphone;
4. An active high output which partially mutes the receive path during dialing. The circuit which does the partial muting is shown in Figure 7.

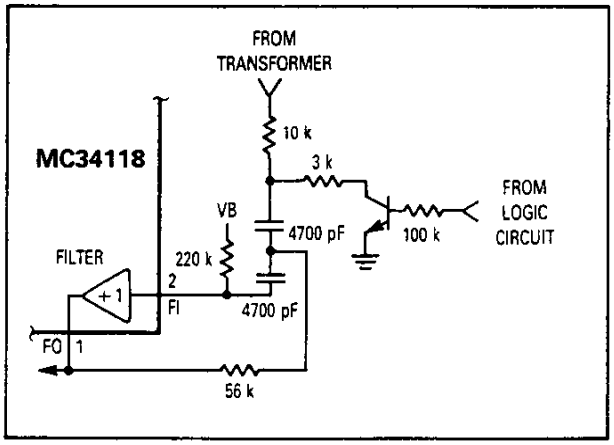

Figure 7. Receive Path Muting

The muting circuit, consisting of the transistor and the 3 k and 10 k resistors, is inserted in the line from the transformer to the filter. Normally the transistor is off and the 10 k resistor has little effect on the circuit due to the high input impedance of the filter (>200 kΩ @ 1 kHz). When Mute is asserted, the signal to the filter is muted by ≈12.7 dB.

The MC34118's Disable pin (Pin 3) is hard wired to ground since the MC34118 must be functional for both the speakerphone and handset modes.

Adding the Tone Ringer

The MC34017 tone ringer circuit, shown in Figure 8, is added to the circuit by simply connecting it across Tip and Ring. It is not necessary to disconnect the tone ringer when off-hook. This circuit will provide a ringer with an REN of ≈1 and meet all the EIA-470 and Bell System requirements for impedance, anti-bell tapping and turn-on/off thresholds.

Finally, the Complete Circuit

The complete line-powered featurephone is shown in Figure 9. HS1 and HS2 are the two poles of the hook-switch activated by lifting the handset off-hook (HS2 is the Mode Select Switch of Figure 6). SS1 is a single pole switch which, when closed (and the handset is on-hook), powers up the circuit into the speakerphone mode. Should the handset be taken off-hook, the circuit reverts to the handset mode.

The performance curves for the circuit are shown in Figures 10–15. The "Speaker Amp Max Output Swing" is the maximum rms voltage available across pins 5 and 8 of the MC34119 without noticeable clipping. The transmit gain tests involved replacing each microphone with a signal generator and adjusting for a level of approximately −11 dBm at Tip and Ring into a 600 Ω resistive load. The receive tests involve applying approximately −27 dBm to Tip and Ring, and measuring the gain to the receiver or speaker.

As can be seen in Figure 11, the maximum available speaker power is a function of the loop current since all of the speaker current must come from the loop. Consequently, the receive gain for the speakerphone (Figure 14) shows a marked decrease at low loop currents. It must be remembered that in a line powered speakerphone, as the speaker draws current in response to a receive signal, the voltage at Tip and Ring decreases quickly. As V_{CC} falls with the Tip and Ring voltage, not only is the speaker amp's output capability reduced, but the MC34118's AGC circuit automatically reduces the receive gain as V_{CC} falls below 3.5 volts. This feature prevents slow oscillations (motor-boating) due to the speaker's current demands. A 25 Ω speaker is recommended as this makes the best use of the power available from the phone line. A lower impedance speaker will require more current, causing V_{CC} to sag further for a given signal level. A higher impedance speaker draws less current, but produces less sound power.

The slight degradation of DTMF levels in Figure 11 and in the transmit levels in Figure 12, at higher loop currents is a function of the transformer's performance at those current levels.

Additionally, the following muting specs apply:

1. **Handset microphone:** ≈37 dB while dialing, in speakerphone mode, or when Mike mute switch is closed.
2. **Speakerphone microphone:** >60 dB while dialing or due to Mike Mute switch, plus an additional 52 dB due to the MC34118 switching to the receive mode. >60 dB while in the handset mode.
3. **Handset receiver:** ≈12.7 dB while dialing, ≈45 dB when in the speakerphone mode.
4. **Speaker:** ≈12.7 dB while dialing, >100 dB when in handset mode.

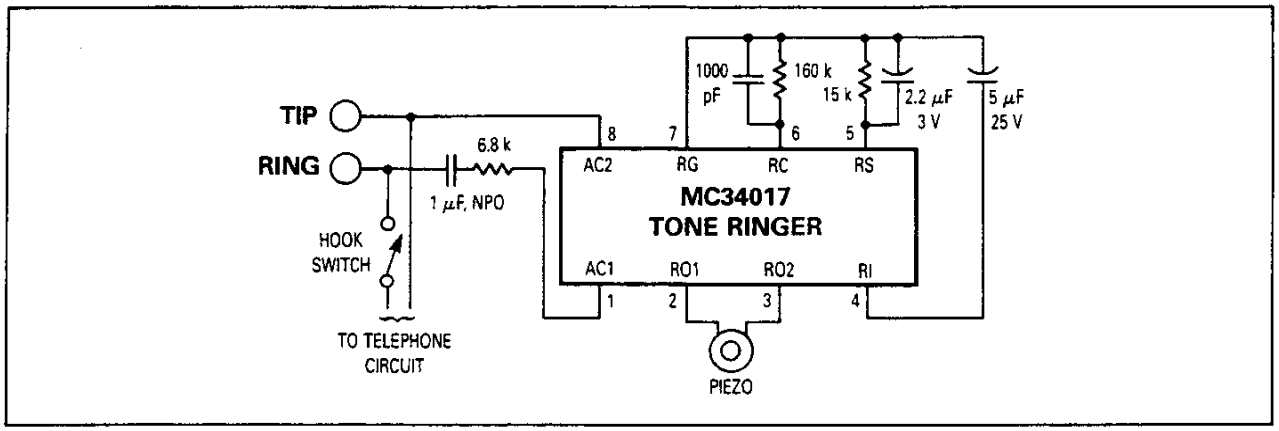

Figure 8. Tone Ringer Circuit

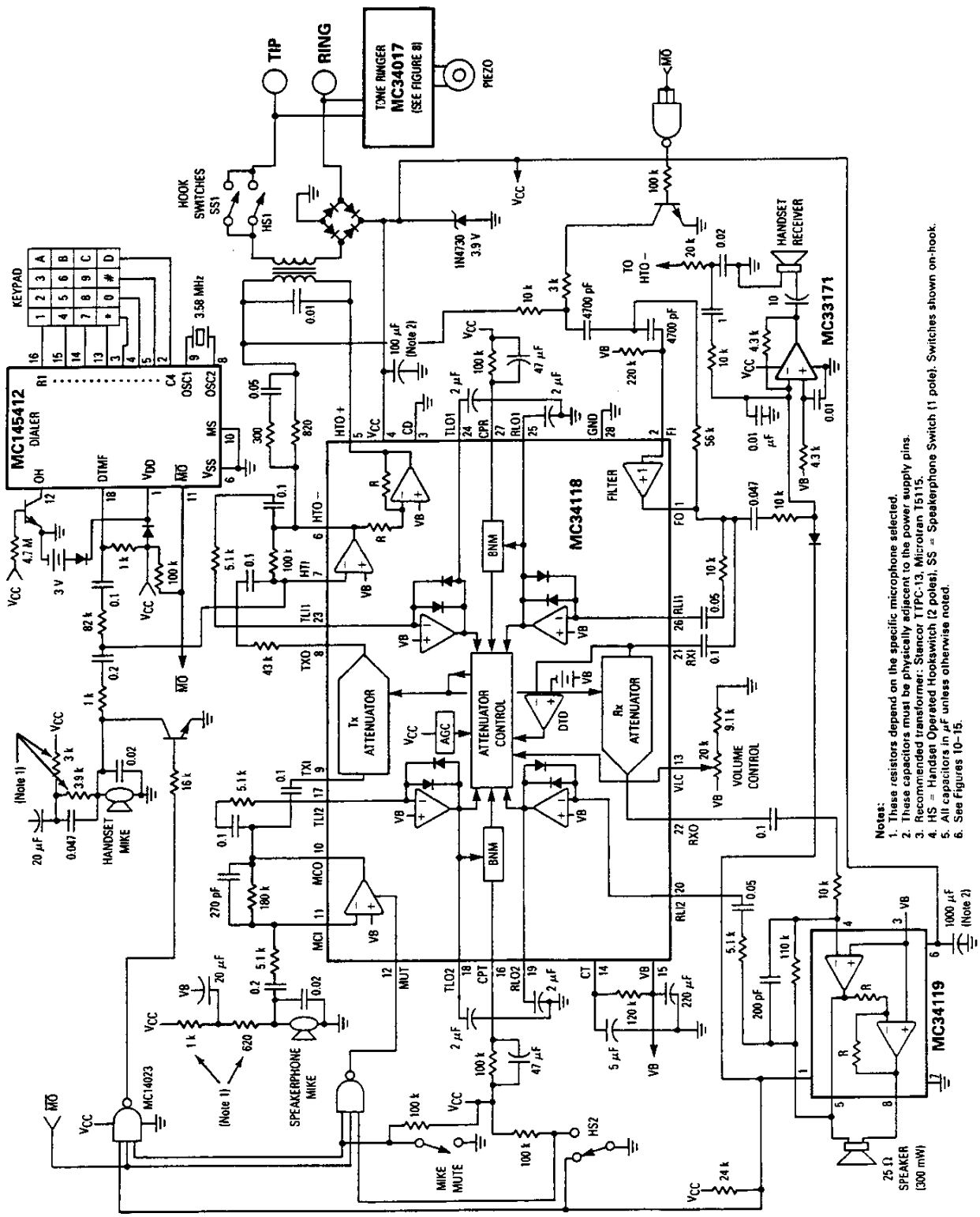

Notes:
1. These resistors depend on the specific microphone selected.
2. These capacitors must be physically adjacent to the power supply pins.
3. Recommended transformer: Stancor TTPC-13, Microtran T5115.
4. HS = Handset Operated Hookswitch (2 poles), SS = Speakerphone Switch (1 pole). Switches shown on-hook.
5. All capacitors in μF unless otherwise noted.
6. See Figures 10–15.

Figure 9. Line-Powered Featurephone

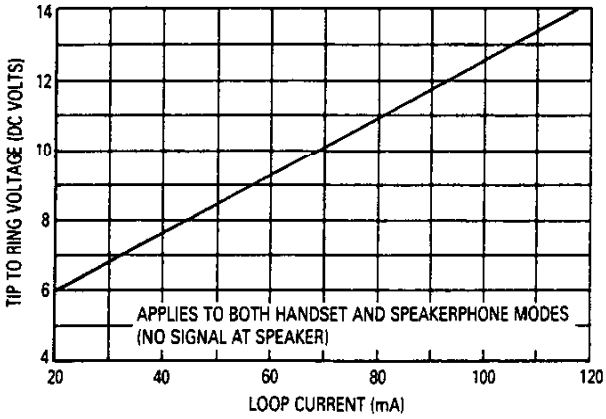

Figure 10. Tip to Ring DC Voltage versus Loop Current

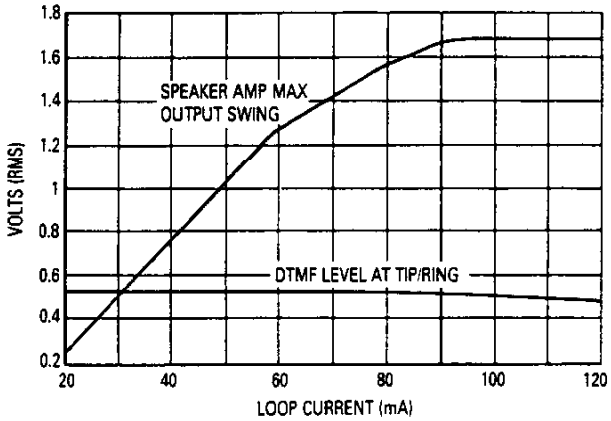

Figure 11. Speaker Amp. Output and DTMF Level versus Loop Current

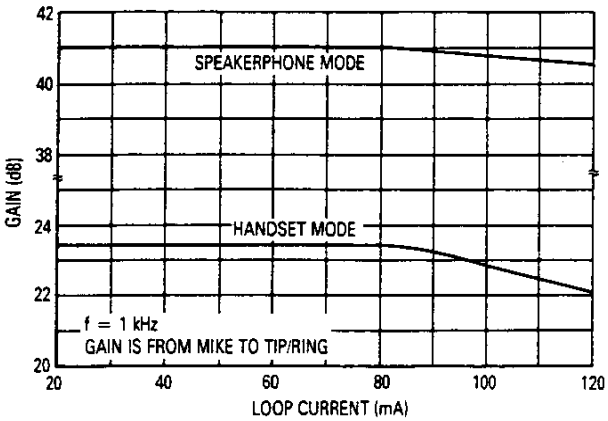

Figure 12. Transmit Gain versus Loop Current

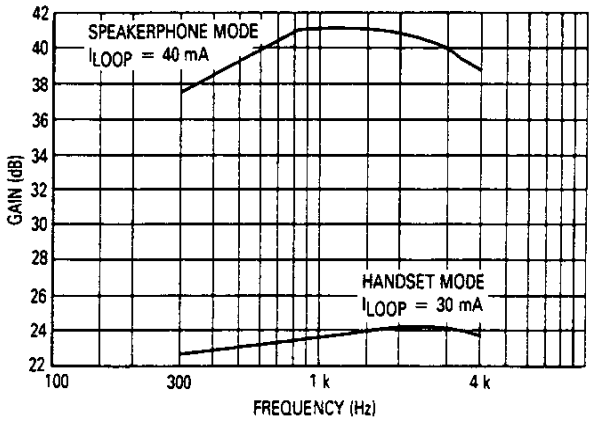

Figure 13. Transmit Gain versus Frequency

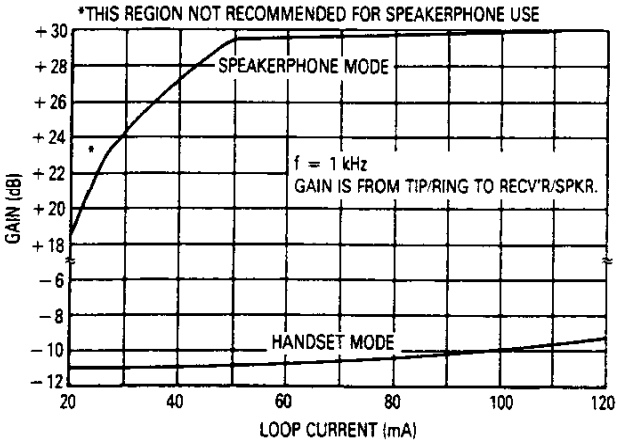

Figure 14. Receive Gain versus Loop Current

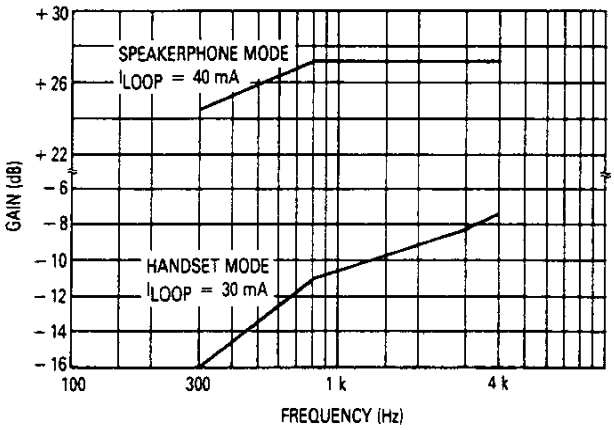

Figure 15. Receive Gain versus Frequency

USING A POWER SUPPLY INSTEAD OF LINE POWER

Figure 16 shows the circuit of Figure 9 modified for use with a +5 volt power supply. The only changes are at the Tip and Ring interface where the zener diode and bridge have been eliminated, but the two hook switches (HS and SS) require one more pole each. The transformer is used to pass the speech signals and to provide the required isolation.

Current required from the +5 volt power supply is as follows:

1. Handset speech mode: 6 mA.
2. Handset dialing mode: 11 mA
3. Speakerphone speech mode (no speech signals): 9 mA.
4. Speakerphone receive mode, −27 dBm at Tip and Ring: 51 mA.
5. Speakerphone receive mode, −9 dBm at Tip and Ring: 100 mA.
6. Speakerphone dialing mode: 19 mA.

Items 4, 5 and 6 above were measured with a 25 Ω speaker and the volume control set to maximum.

The performance characteristics are shown in Figures 17–22. The Tip and Ring DC voltage (Figure 17) is now a function only of the transformer winding resistance and so is somewhat lower than in the previous circuit.

The speakerphone performance (Figures 18 and 21) is now constant with respect to loop current since V_{CC} is fixed. Performance at 20 mA is similar to that at higher loop currents, unlike the previous circuit. Although the speaker can be 25 Ω as in the previous circuit, it need not be since the available power is not limited as before. The recommended range for speaker impedance is 8–32 Ω. For different speaker impedances, however, the gain of the speaker amplifier may have to be changed to compensate for the different power level.

The slight degradation in the transmit curves at high loop currents is evident in Figures 18 and 19, as was in the previous circuit.

The muting specs of the transmit and receive paths are the same for this circuit as for the previous one.

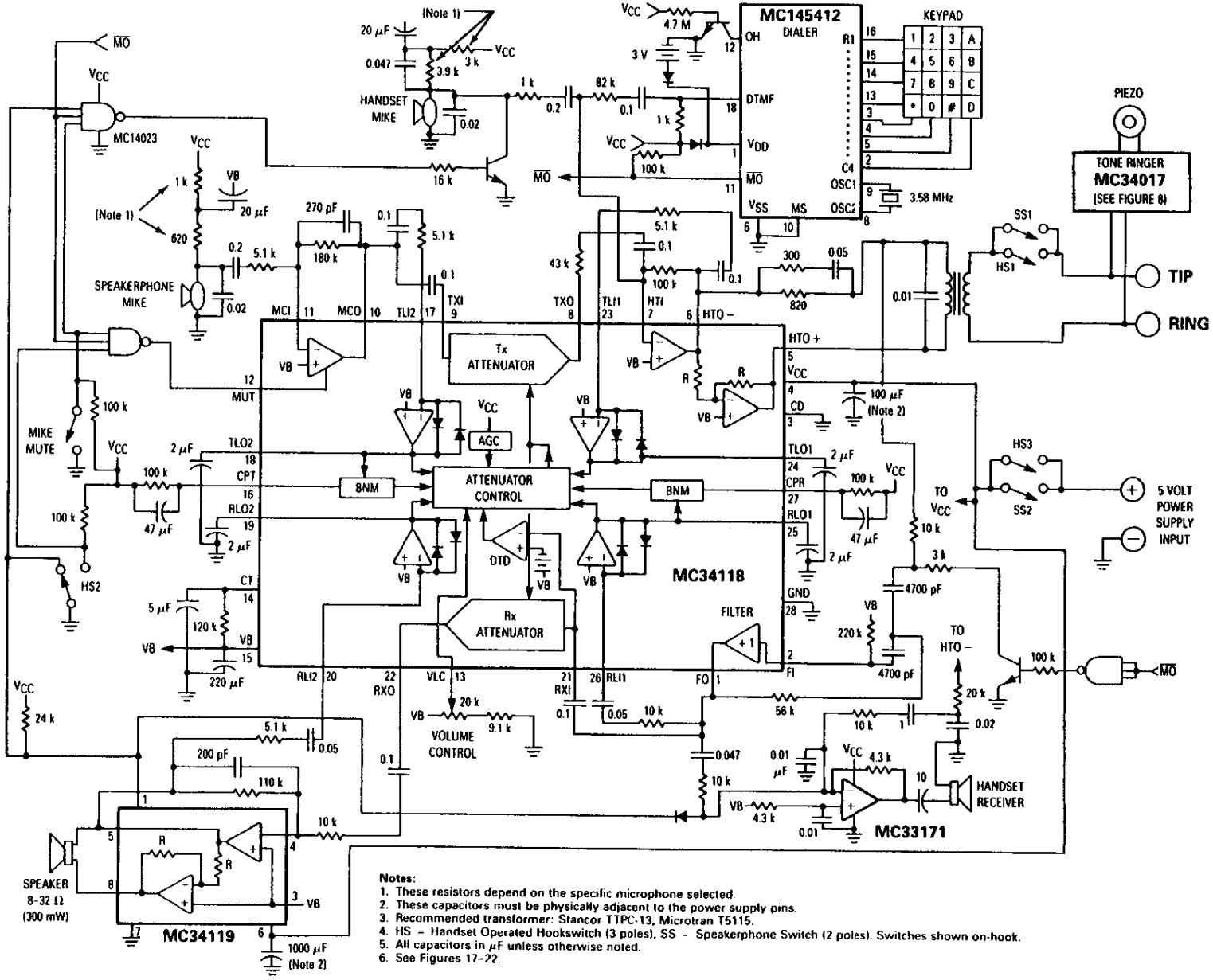

Notes:
1. These resistors depend on the specific microphone selected.
2. These capacitors must be physically adjacent to the power supply pins.
3. Recommended transformer: Stancor TTPC-13, Microtran T5115.
4. HS = Handset Operated Hookswitch (3 poles), SS = Speakerphone Switch (2 poles). Switches shown on-hook.
5. All capacitors in μF unless otherwise noted.
6. See Figures 17-22.

Figure 16. Featurephone With Power Supply

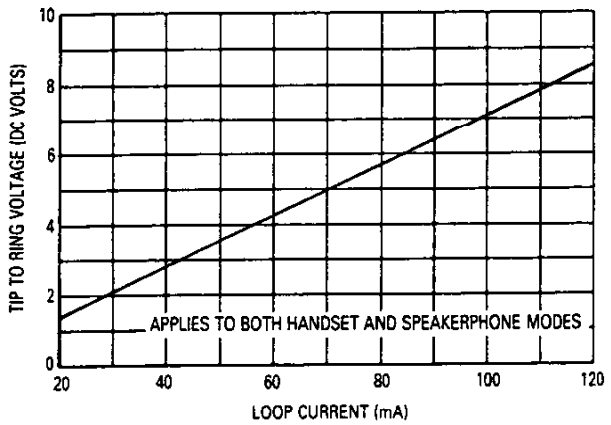

Figure 17. Tip to Ring DC Voltage versus Loop Current

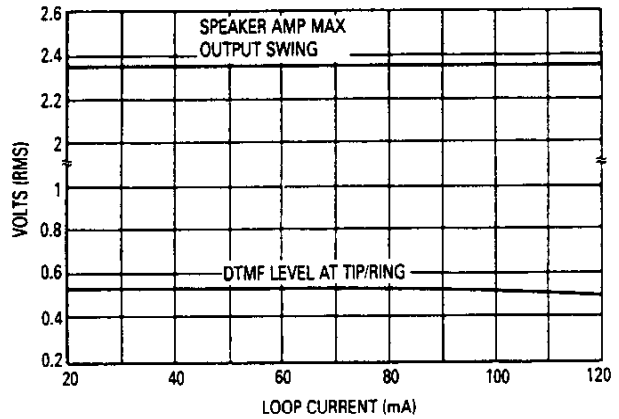

Figure 18. Speaker Amp. Output and DTMF Level versus Loop Current

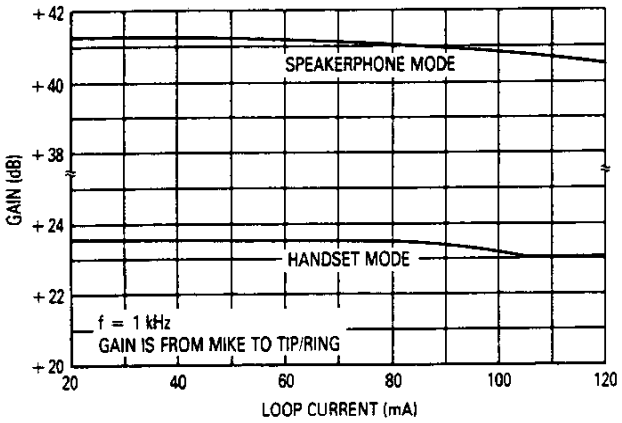

Figure 19. Transmit Gain versus Loop Current

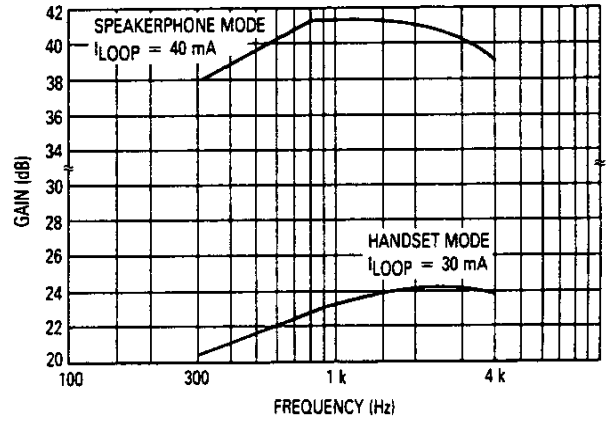

Figure 20. Transmit Gain versus Frequency

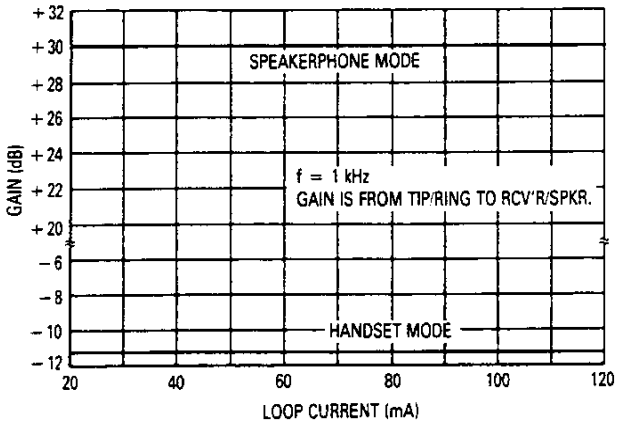

Figure 21. Receive Gain versus Loop Current

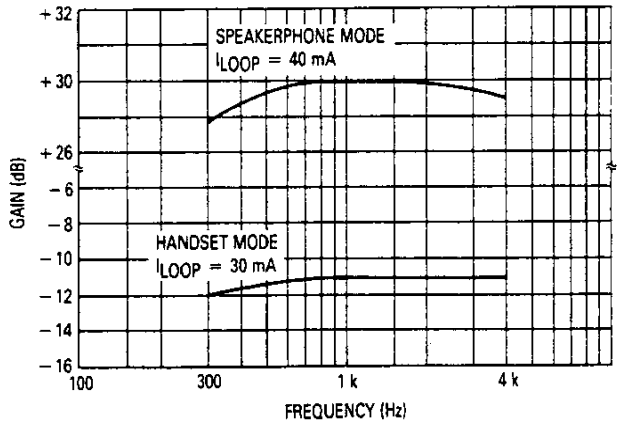

Figure 22. Receive Gain versus Frequency

Board Layout

The filter capacitors for the speakerphone IC and the speaker amplifier IC (100 μF and 1000 μF respectively) must be physically adjacent to the pins of the ICs, within 1". This is especially important in the line-powered version, where V_{CC} varies with the speech intensity. Since most of the current is used in the speaker amp, the PC board track leading to Pin 6 of the MC34119 should be laid out with care, preferrably close to the zener diode, or the power supply connector. The ground tracks should be as wide as possible, and laid out with care.

RFI Interference

Potential radio frequency interference problems should be addressed early in the electrical and mechanical design of the speakerphone. RFI may enter the circuit through Tip and Ring, through the microphone wiring to the amplifiers, or through any of the PC board traces. The most sensitive pins on the MC34118 are the inputs to the level detectors (RLI1, RLI2, TLI1 and TLI2) since, when there is no speech present, the inputs are high impedance and these op amps are in a near open loop condition. These board traces should be kept short and the resistor and capacitor for each input should be physically close to the pins. Other high impedance input pins (MCI, HTI, FI and VLC) should be considered sensitive to RFI signals.

The microphone wires within the handset cord can act as an antenna and pick up nearby radio stations. If this is a problem in the final design, adding RF filters (consisting of ferrite beads and small (0.001 μF) ceramic capacitors) to the PC board where the wires attach to the board can generally reduce the problem.

Acoustics

a. In the design of any speakerphone, acoustics are extremely important and **must** be considered from the very beginning. Building a breadboard and having the microphone and speaker "hanging out in mid air" simply **will not work!** One of the most difficult problems in a speakerphone design is acoustic feedback (the speaker talks to the microphone) which results either in oscillations (2–10 kHz) or "motor-boating" (1–10 Hz switching). A properly designed enclosure for the finished product should provide at least 50 dB of acoustic loss (speaker voltage to microphone output voltage). The physical location of the microphone, along with the characteristics of the microphone, will play a large role in the quality of the transmitted sound. The microphone and speaker vendors can usually provide additional information on the use of their products.

b. The quality of the speaker and the acoustic cavity in which it resides, have a major impact on the quality of the sound. A little time spent here can improve the sound of the finished speakerphone. As a general rule, good electronics cannot compensate for poor acoustics and/or low speaker quality.

In The Final Analysis . . .

In the final analysis, the circuits shown in this application note will have to be "fine tuned" to match the acoustics of the enclosure and the specific microphone and speaker selected. The component values shown in this application note should be considered as starting points only. The gains of the transmit and receive paths are easily adjusted at the microphones and speaker/receiver amplifiers, respectively. The switching response of the speakerphone can then be fine tuned by varying (in small steps) the components at the level detector inputs until satisfactory operation is obtained for both long and short lines. The MC34118 data sheet should be consulted for additional speakerphone design theory.

GLOSSARY

Attenuation — A decrease in magnitude of a communication signal, usually expressed in dB.

Bandwidth — The range of information carrying frequencies of a communication system.

C-Message filter — A frequency weighting which evaluates the effects of noise on a typical subscriber's system.

Central Office — Abbreviated CO, it is a main telephone office, usually within of a few miles of its subscribers, that houses switching gear for interconnection within its exchange area and to the rest of the telephone system. A typical CO can handle up to 10,000 subscriber numbers.

dB — A power or voltage measurement unit, referred to another power or voltage. It is generally computed as:

$10 \times \log (P_1/P_2)$ for power measurements and

$20 \times \log (V_1/V_2)$ for voltage measurements.

dBm — An indication of signal power. 1 mW across 600 Ω, or 0.775 volts rms, is defined as 0 dBm. Any other voltage level is converted to dBm by:

dBm = 20 x log (Vrms/0.775), or

dBm = [20 x log (Vrms)] + 2.22.

dBmp — Indicates dBm measurement using a psophometric weighting filter.

dBrn — Indicates a dBm measurement relative to 1 pW power level into 600 Ω. Generally used for noise measurements, 0 dBrn = −90 dBm.

dBrnC — Indicates a dBrn measurement using a C-message weighting filter.

dBrnCO — Noise measured in dBrnC referred to zero transmission level.

DTMF — Dual Tone MultiFrequency. It is the "tone dialing" system based on outputting two non-harmonic related frequencies simultaneously to identify the number dialed. Eight frequencies have been assigned to the four rows and four columns of a typical keypad.

Four wire circuit — The portion of a telephone, or central office, which operates on two pairs of wires. One pair is for the Transmit path (generally from the microphone) and one pair is for the Receive path (generally to the receiver).

Full duplex — A transmission system which permits communication in both directions simultaneously. The standard handset telephone is full duplex.

Gain — The change in signal amplitude (increase or decrease) after passing through an amplifier or other circuit stage. Usually expressed in dB, an increase is a positive number and a decrease is a negative number.

Half duplex — A transmission system which permits communication in one direction at a time. CB radios, with "push-to-talk" switches and voice activated speakerphones, are half duplex.

Hookswitch — A switch which connects the telephone circuit to the subscriber loop. The name derives from old telephones where the switch was activated by lifting the receiver off and onto a hook on the side of the phone.

Line length compensation — This is also referred to as loop compensation. It involves changing the gain of the transmit and receive paths, within a telephone, to compensate for different signal levels at the end of different line lengths. A short line (close to the CO) will attenuate signals less and therefore less gain is needed. Compensation circuits generally use the loop current as an indication of the line length.

Loop — The loop formed by the two subscriber wires (Tip and Ring) connected to the telephone at one end and the central office (or PBX) at the other end. Generally it is a floating system, not referred to ground, or ac power.

Loop Current — The dc current which flows through the subscriber loop. Typically provided by the central office or PBX, it ranges from 20 to 120 mA.

Off hook — The condition when the telephone is connected to the phone system, permitting the loop current to flow. The central office detects the dc current as an indication that the phone is busy.

On hook — The condition when the telephone is disconnected from the phone system and no dc loop current flows. The central office regards an on-hook phone as available for ringing.

PABX — Private Automatic Branch Exchange. This is a customer owned switching system servicing the phones within a facility. It is in effect, a miniature central office. A portion of the PABX connects to the Bell (or other local) telephone system.

Pulse dialing — A dialing system whereby the loop current is interrupted a number of times in quick succession. The number of interruptions corresponds to the number dialed and the interruption rate is typically 10 times per second. The old rotary phones and many new pushbutton phones, use pulse dialing.

REN — Ringer Equivalence Number. This is an indication of the impedance, or loading factor, of a telephone bell or ringer circuit. A REN of 1 equals ≈8 k ohms. The Bell system typically permits a maximum of 5 REN (1.6 kΩ) on an individual subscriber line. A minimum REN of 0.2 (40 kΩ) is required by the Bell system.

Ring — This is one of the two wires connecting the central office to a telephone. The name derives from the ring portion of the plugs used by operators (in older equipment) to make the connection. Ring is traditionally negative with respect to Tip.

Sidetone — The sound fed back to the receiver as a result of speaking into the microphone. It is a natural consequence of the 2-to-4 wire conversion system. Sidetone was recognized by Alexander Graham Bell as being necessary for a person to be able to speak properly while using a handset.

Speech network — A circuit which provides 2-to-4 wire conversion, i.e. connects the microphone and receiver (or the transmit and receive paths) to the Tip and Ring phone lines. Additionally it provides sidetone control and in many cases, the dc loop current interface.

Subscriber Line — This is the system consisting of the user's telephone, the interconnecting wires and the central office equipment dedicated to that subscriber. It is also referred to as a loop.

Tip — One of the two wires connecting the central office to a telephone. The name derives from the tip of the plugs used by operators (in older equipment) to make the connection. Tip is traditionally positive with respect to Ring.

Tone Ringer — The modern solid state equivalent of the old electromechanical bell. It provides the sound when the central office alerts the subscriber that someone is calling. Ringing voltage is typically 80–90 Vrms, 20 Hz.

Two wire circuit — Refers to the two wires connecting the central office to the subscriber's telephone. Commonly referred to as Tip and Ring, the two wires carry both transmit and receive signals in a differential manner.

Voiceband — That portion of the audio frequency range used for transmission across the telephone system. Typically it is 300–3400 Hz.

REFERENCES

MC34118 Data Sheet, April, 1987, Motorola Inc.
MC34119 Data Sheet, October, 1986, Motorola Inc.
MC33171 Data Sheet, July, 1985, Motorola Inc.
MC145412 Data Sheet, February, 1987, Motorola Inc.
Busala, A., Fundamental Considerations in the Design of a Voice Switched Speakerphone, B.S.T.J., 39, 1960, p. 265.

SUGGESTED VENDORS

Microphones

Primo Microphones Inc.
Bensenville, Ill. 60106
312-595-1022
Model EM-60

Hosiden America Corp.
Elk Grove Village, Ill. 60007
312-981-1144
Model KUC2123

MURA Corp.
Westbury, N.Y. 11590
516-935-3640
Model EC-983-7

25 Ω Speakers

Panasonic Industrial Co.
Seacaucus, N.J. 07094
201-348-5233
Model EAS-45P19S

Telecom Transformers

Microtran Co., Inc.
Valley Stream, N.Y. 11528
516-561-6050
Various models — ask for catalog and applications Bulletin F232

PREM Magnetics, Inc.
McHenry, Ill. 60050
815-385-2700
Various models — ask for catalog

Stancor Products
Logansport, IN 46947
219-722-2244
Various models — ask for catalog

Onan Power/Electronics
Minneapolis, MN 55437
612-921-5600
Model TC 38-6

Motorola Inc. does not endorse or warrant the suppliers referenced.

Compliance with FCC or other regulatory agencies of the circuits described herein is not implied or guaranteed by Motorola.

Literature Distribution Centers:
USA: Motorola Literature Distribution; P.O. Box 20912; Phoenix, Arizona 85036.
EUROPE: Motorola Ltd.; European Literature Centre; 88 Tanners Drive, Blakelands, Milton Keynes, MK14 5BP, England.
JAPAN: Nippon Motorola Ltd.; 4-32-1, Nishi-Gotanda, Shinagawa-ku, Tokyo 141, Japan.
ASIA PACIFIC: Motorola Semiconductors H.K. Ltd.; Silicon Harbour Center, No. 2 Dai King Street, Tai Po Industrial Estate, Tai Po, N.T., Hong Kong.

MOTOROLA

23114 PRINTED IN USA (1994) MPS/POD YCAEAA

AN1003/D